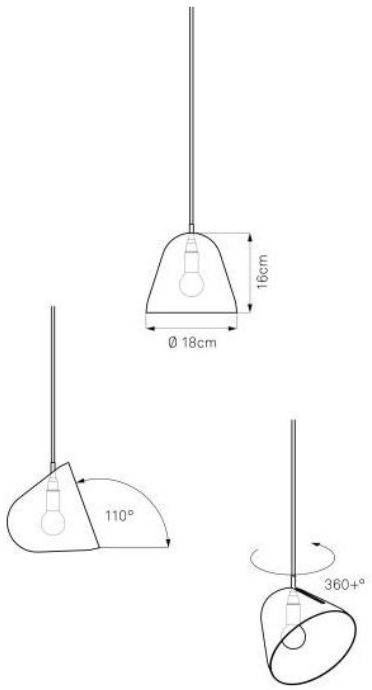

Nyta

Tilt S Surcharge for Cable extension up to 5-meter cable

Technical details

Country of Manufacture	Germany
Manufacturer	Nyta
Designer	jjoo design
material	Textile
cable length	500 cm

Description

The Nyta Tilt S Cable extension to a 5-metre cable is an accessory for the Tilt S pendant lamp. This accessory gives the Tilt S pendant lamp a 5-metre cable.